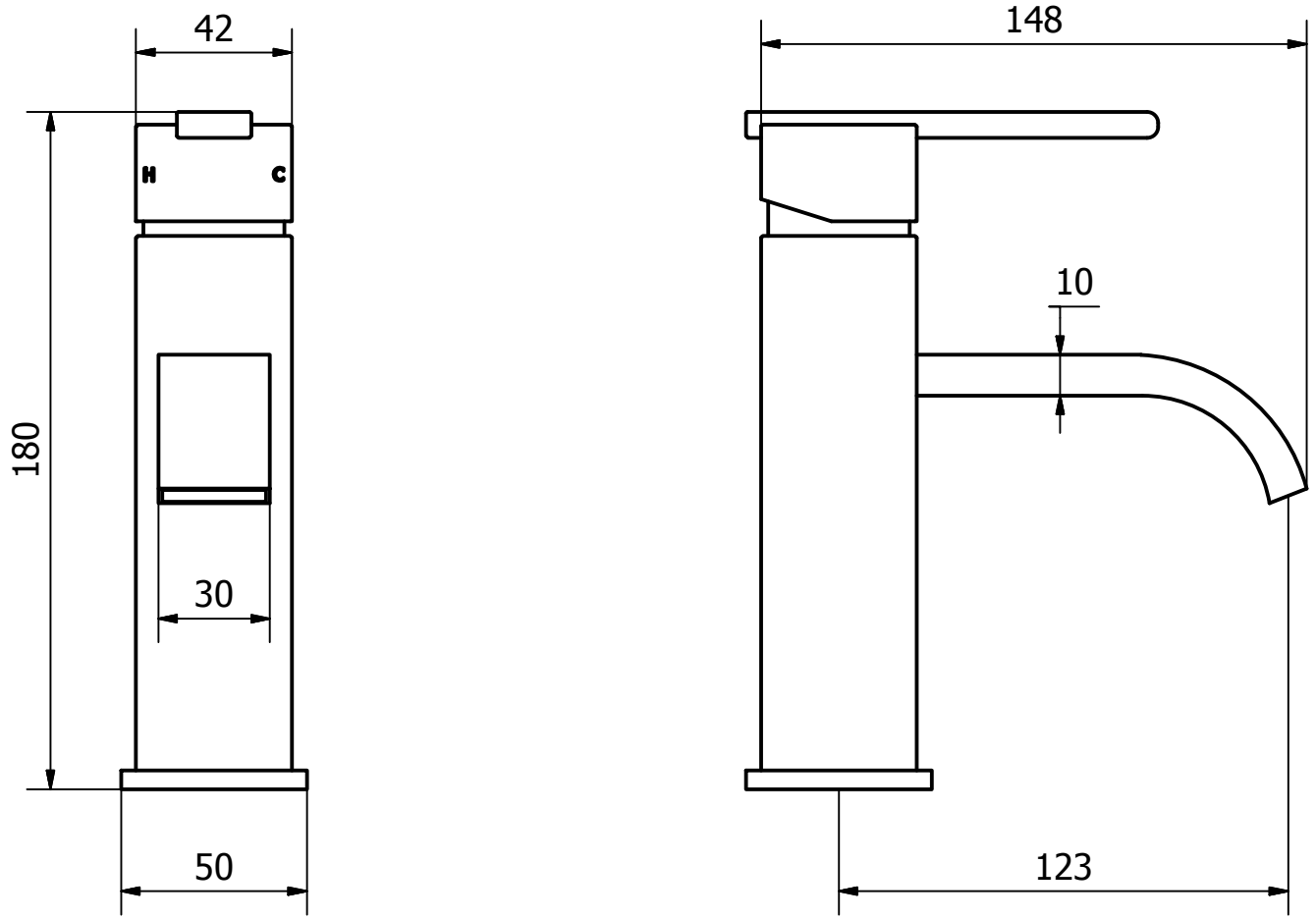


| Designed by | Checked by | Approved by | Date | | Date | |
|---|---|---|---|---|---|---|
| Craig Lowe | | | | | 28/11/2013 | |

| | | | |
|---|---|---|---|
| CASSELLIE LTD | Epic Mono Basin Mixer | | |
| | EPI001 | Edition | Sheet 1 / 1 |

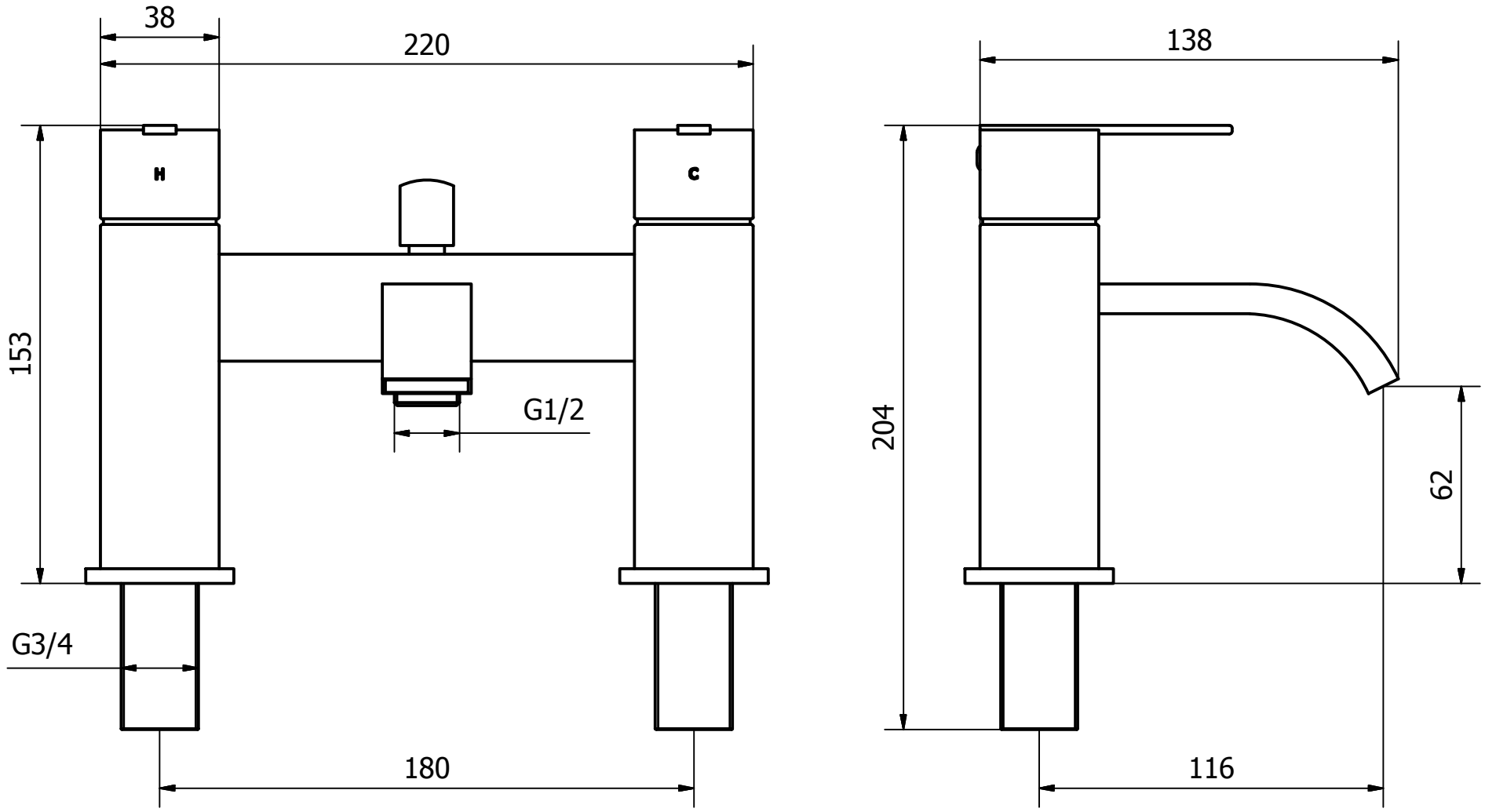


| Designed by | Checked by | Approved by | Date | | Date | |
|---|---|---|---|---|---|---|
| Craig Lowe | | | | | 14/05/2014 | |

| | | | |
|---|---|---|---|
| CASSELLIE LTD | Epic Bath Shower Mixer | | |
| | EPI007 | Edition | Sheet 1 / 1 |