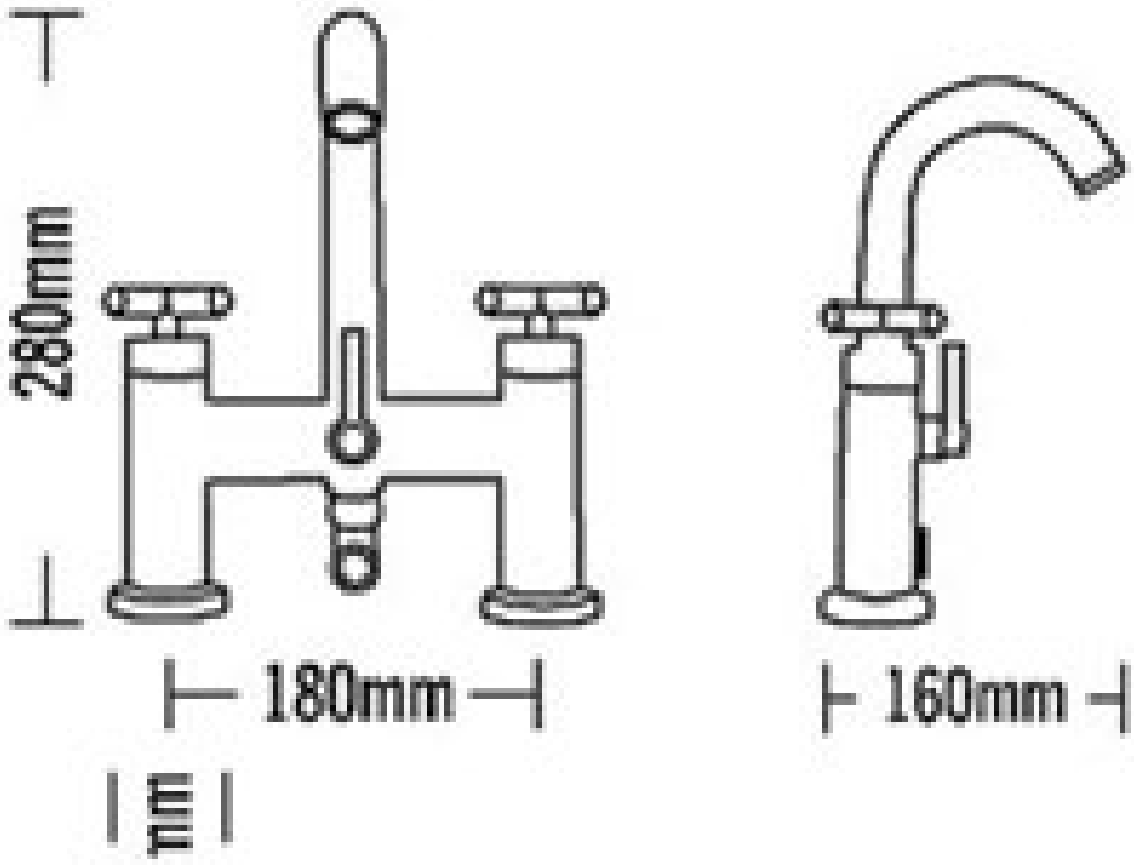
280mm
180mm
160mm
mm