Technical sheet:
TAB-1721/NOT-CP

technical drawing

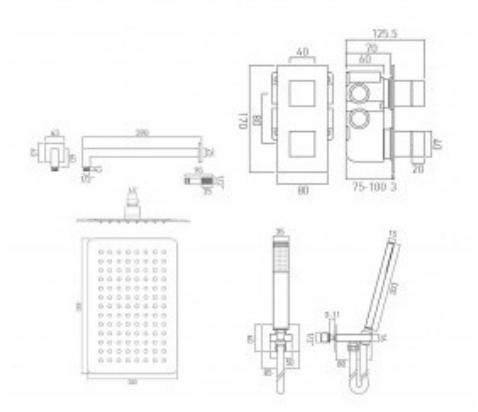

description:

tablet notion vertical
• 2 outlet, 2 handle valve with all-flow function
• aquablade 200mm x 300mm rectangular head and shower arm
• instinct shower kit with integrated outlet and bracket
minimum operating pressure 0.2 bar LP

kit comprises:
TAB-148/2-NOT-C/P
AQB-20X30/SA/A-C/P
INS-SFMKWO-C/P

shower valve includes fittings for 1/2" and 3/4" pipework
min-max wall mount 75-100mm (standard)
optimum installation depth 88mm (standard)

finishes:
chrome

minimum operating pressure: 1.0 bar MP

Eco flow regulator: FR-SHOWER/9-C/P (2 are required)

guarantee:
12 year guarantee

VADO wedmore road cheddar somerset england bs27 3eb

tel 01934 744466 fax 01934 744345 sales@vado-uk.com www.vado-uk.com