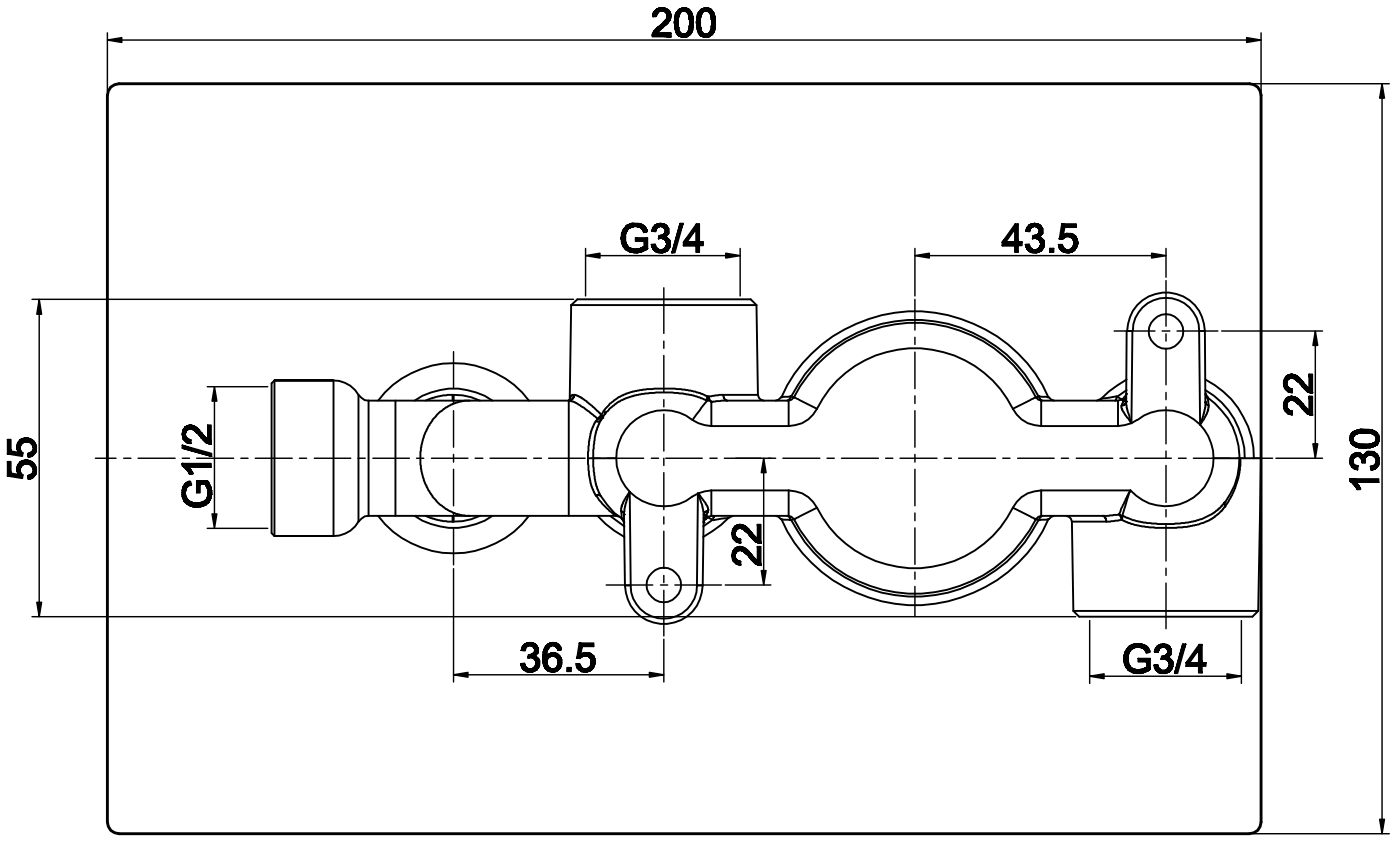
200
G3/4
43.5
55
G1/2
22
130
22
36.5
G3/4

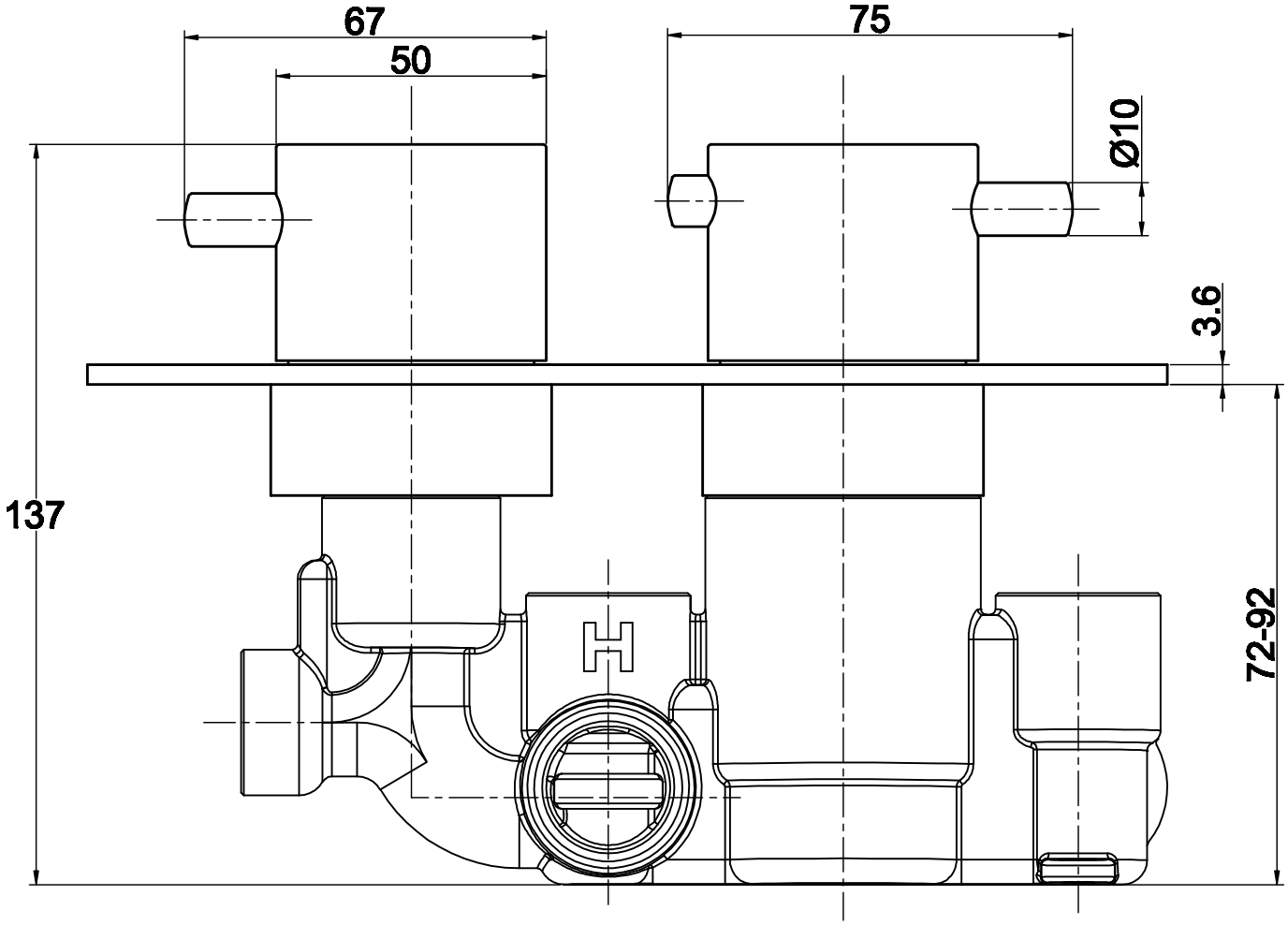
67
50
75
Ø10
3.6
137
72-92