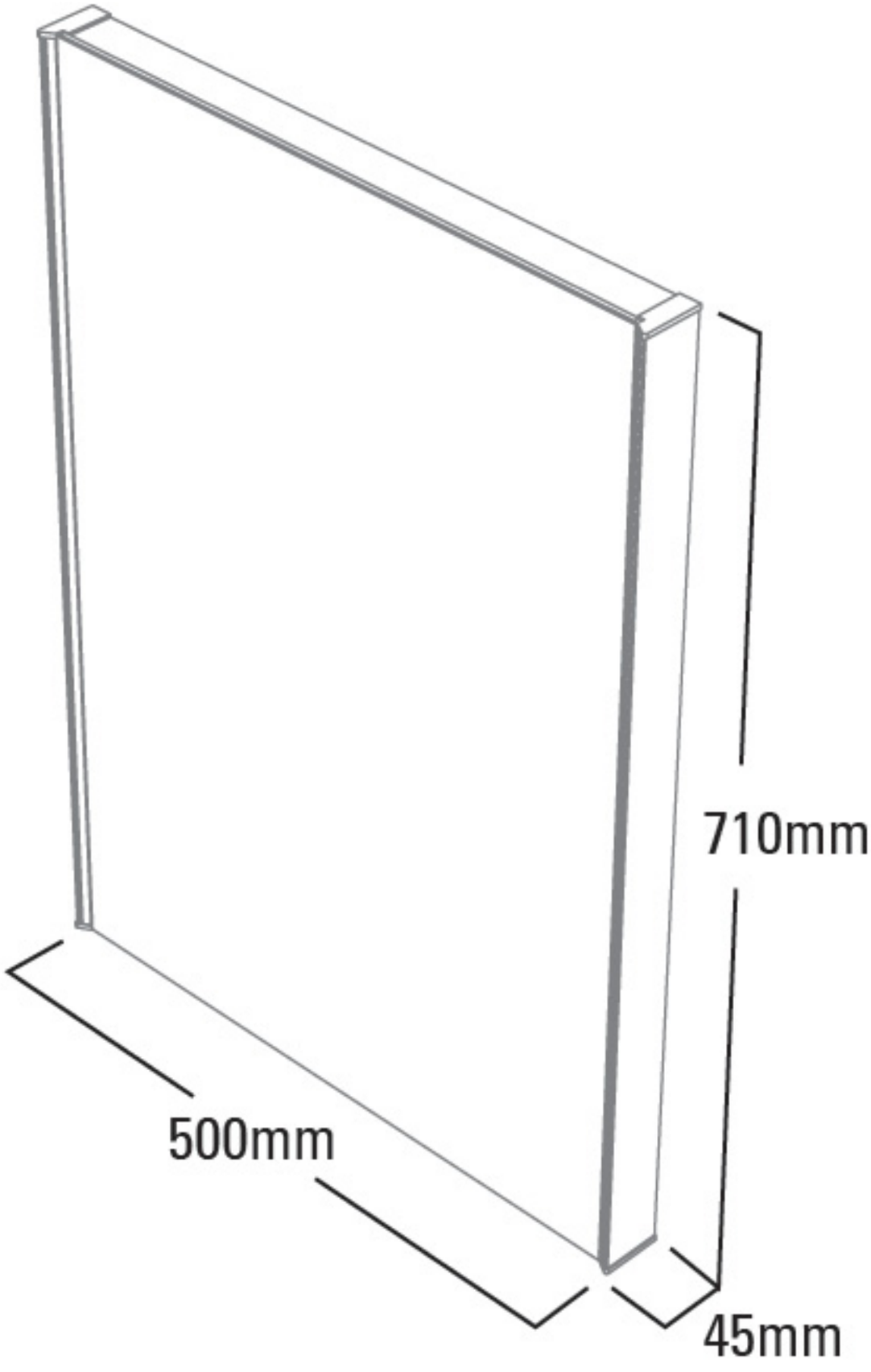
710mm
500mm
45mm