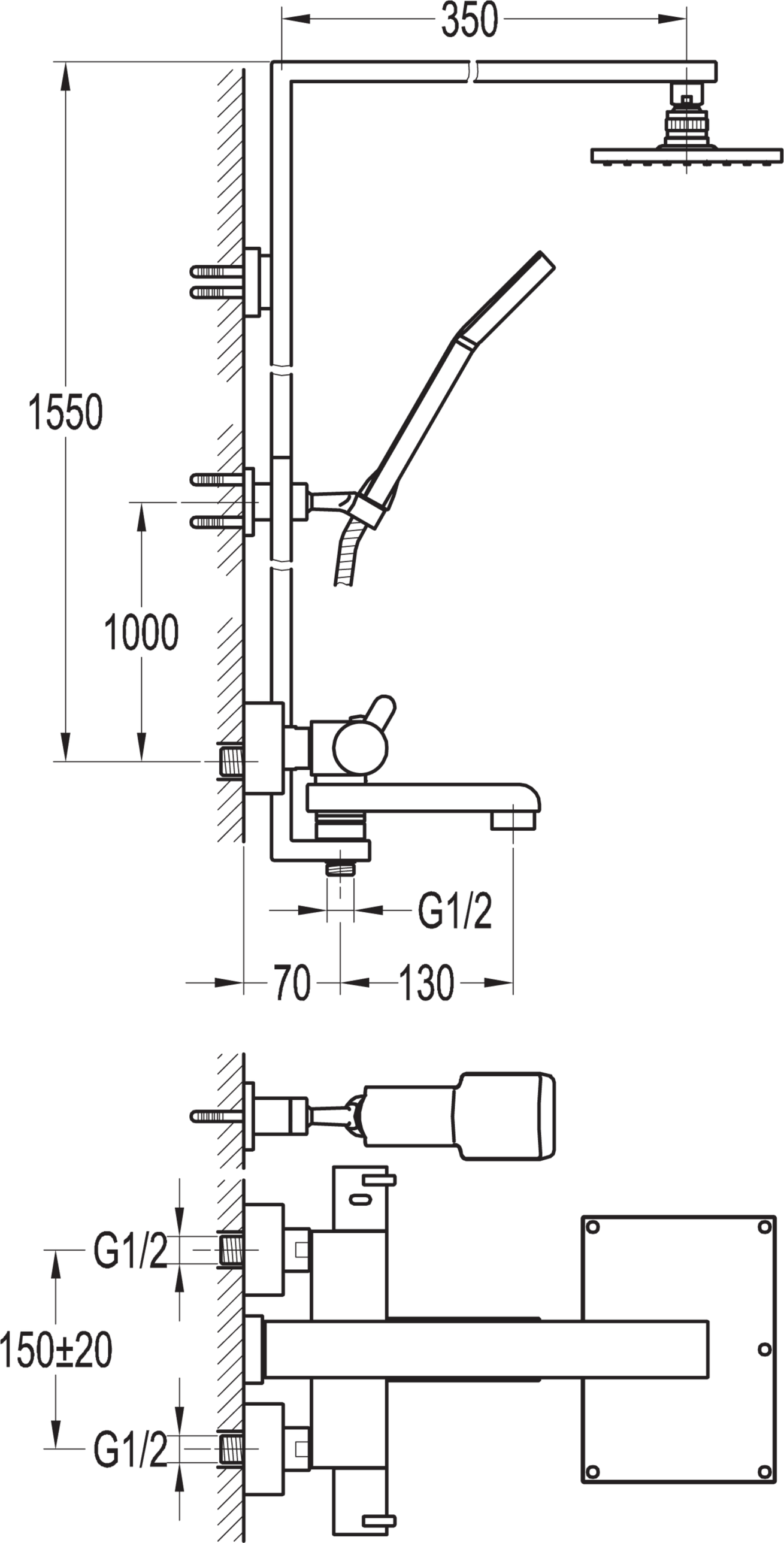
350
1550
1000
G1/2
70
130
G1/2
150±20
G1/2