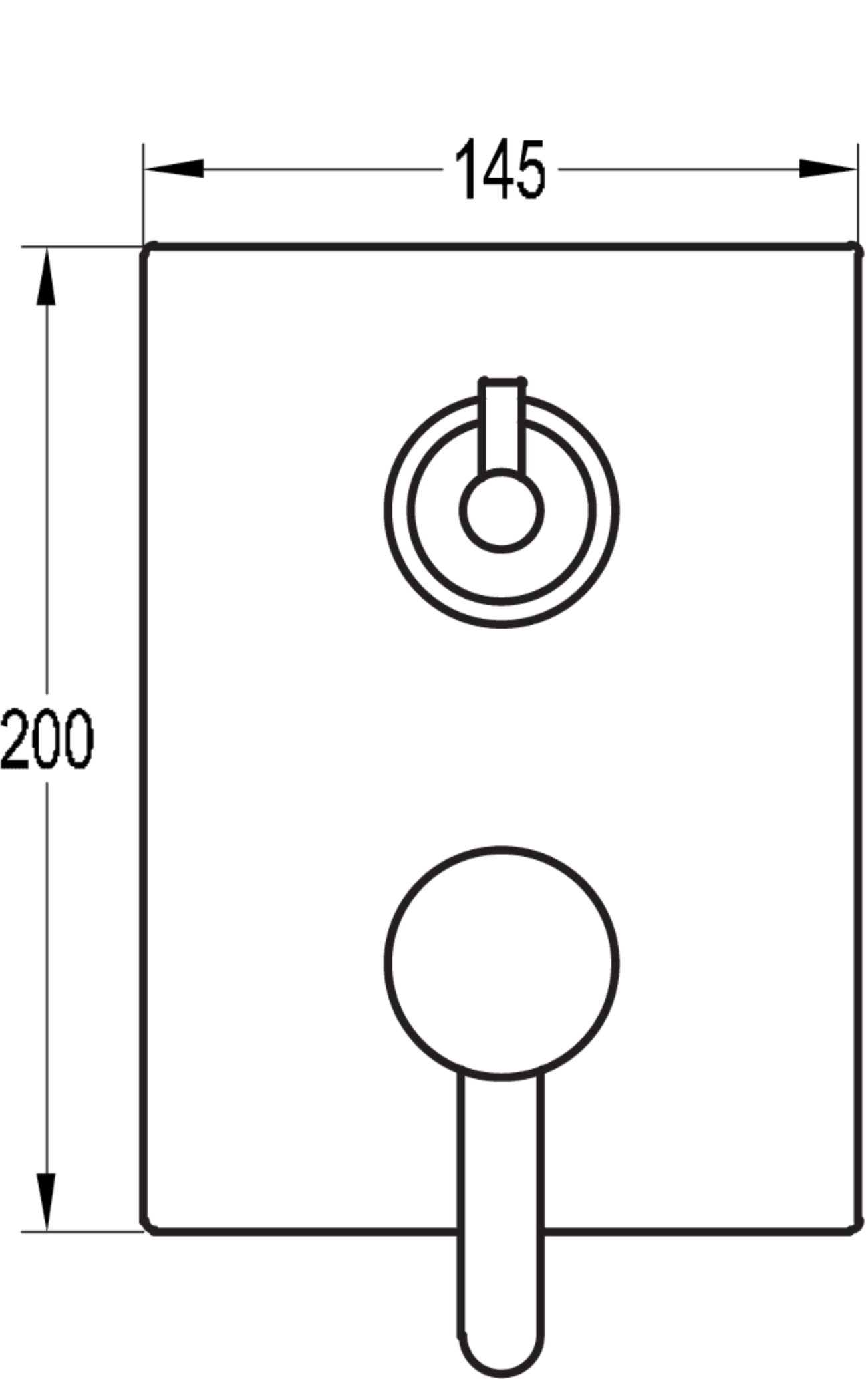
145
200

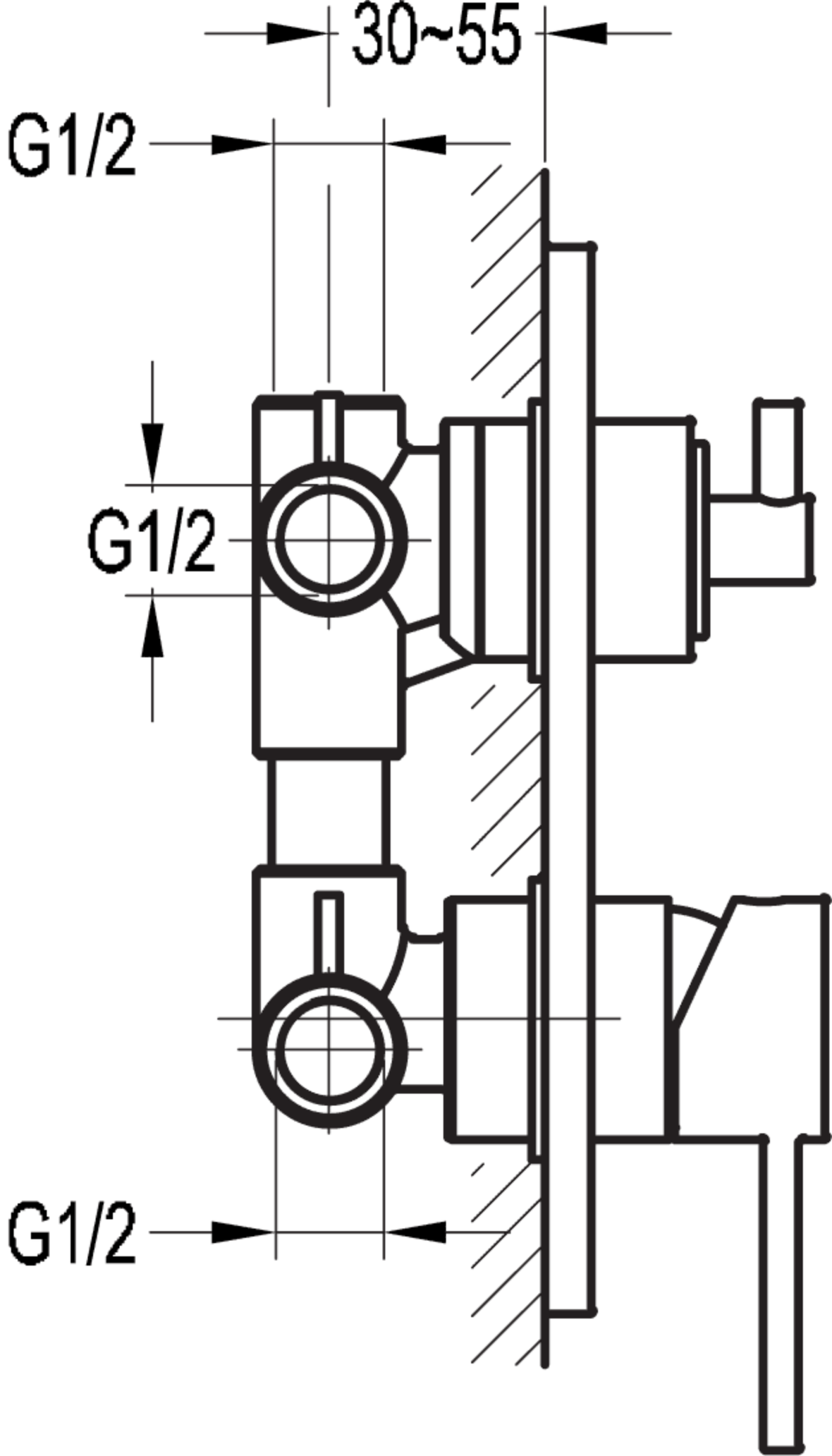
30~55
G1/2
G1/2
G1/2