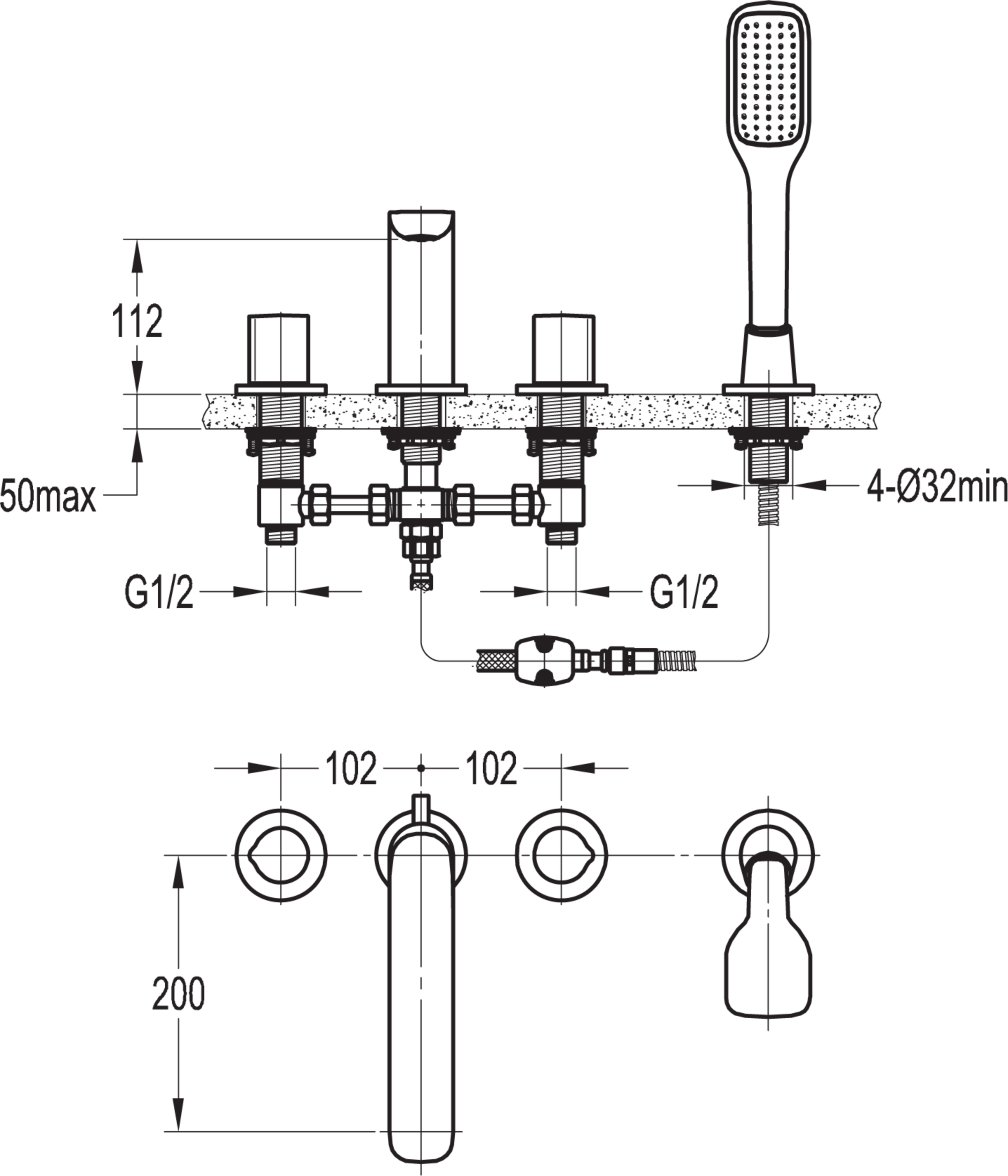
112
50max
4-Ø32min
G1/2
G1/2
102
102
200