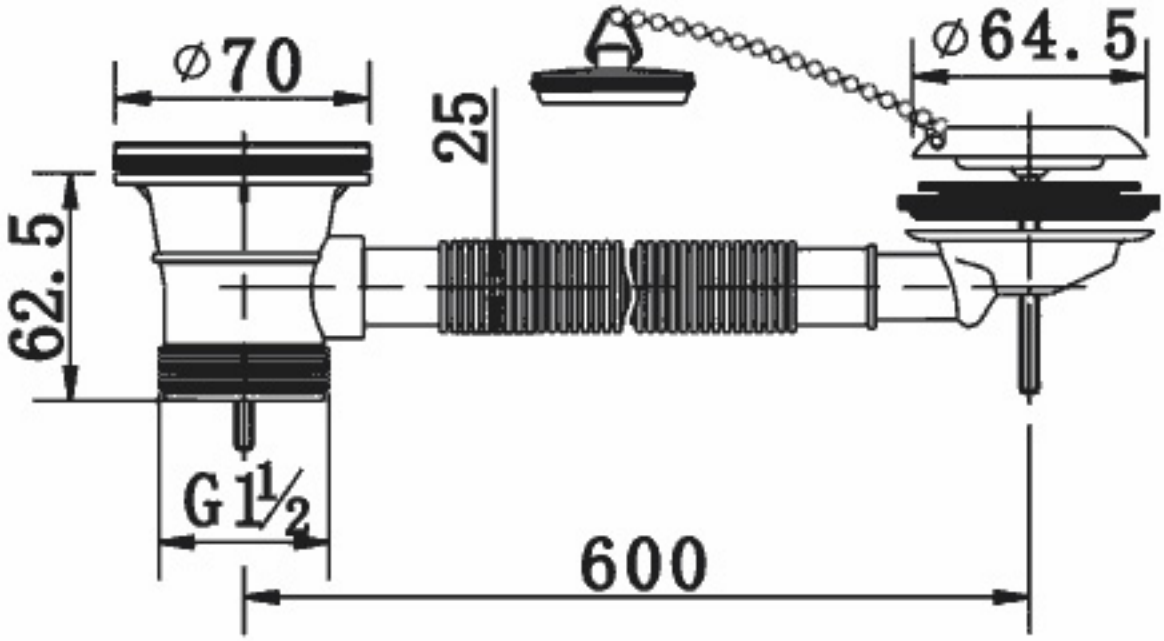
⌀70
25
⌀64.5
62.5
G 1½
600