crosswater

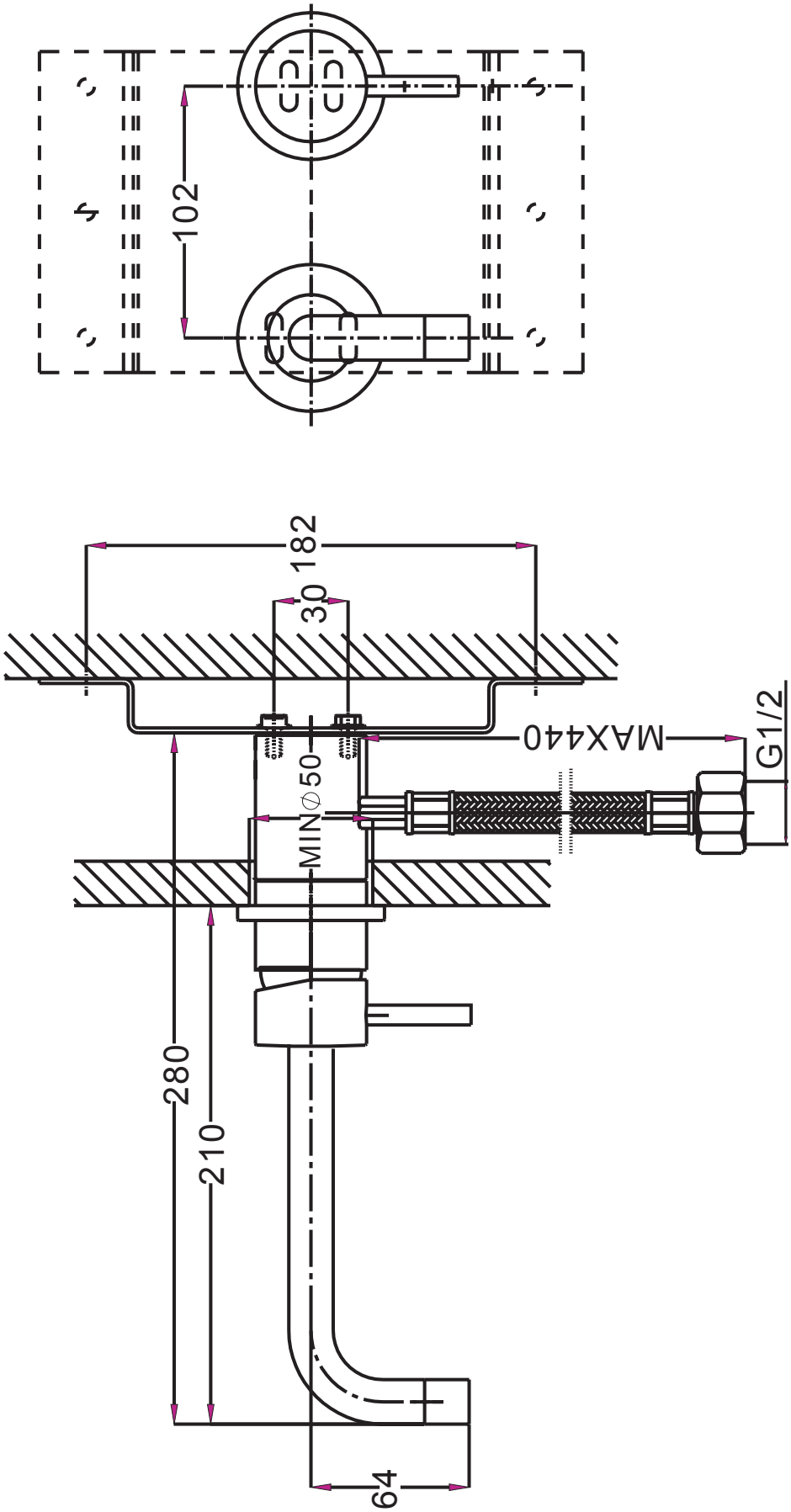

KL120WNC - KAI LEVER BASIN 2 HOLE SET No Waste Wall Mounted LP