crosswater

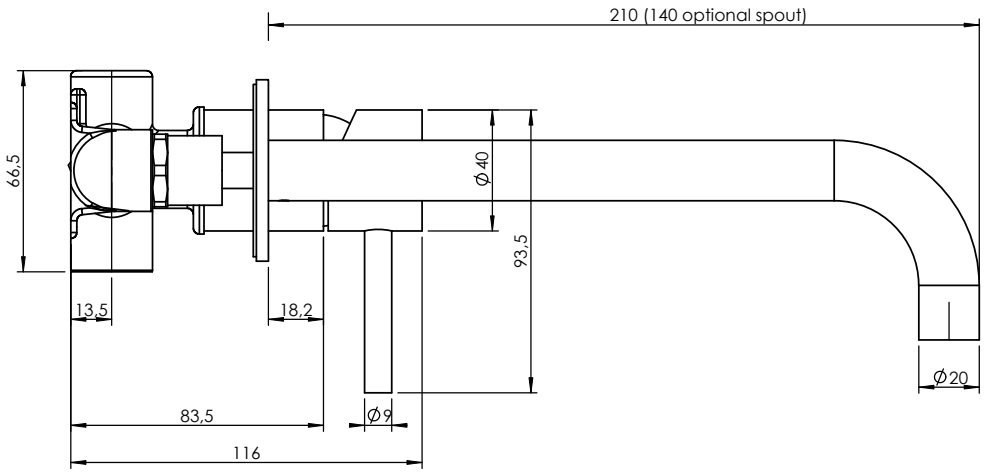

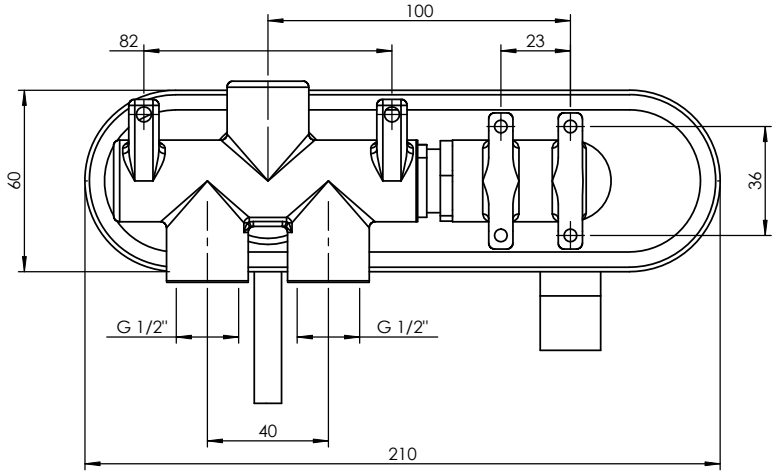

CE121WC - CENTRAL BASIN 2 HOLE SET

On Plate Wall Mounted