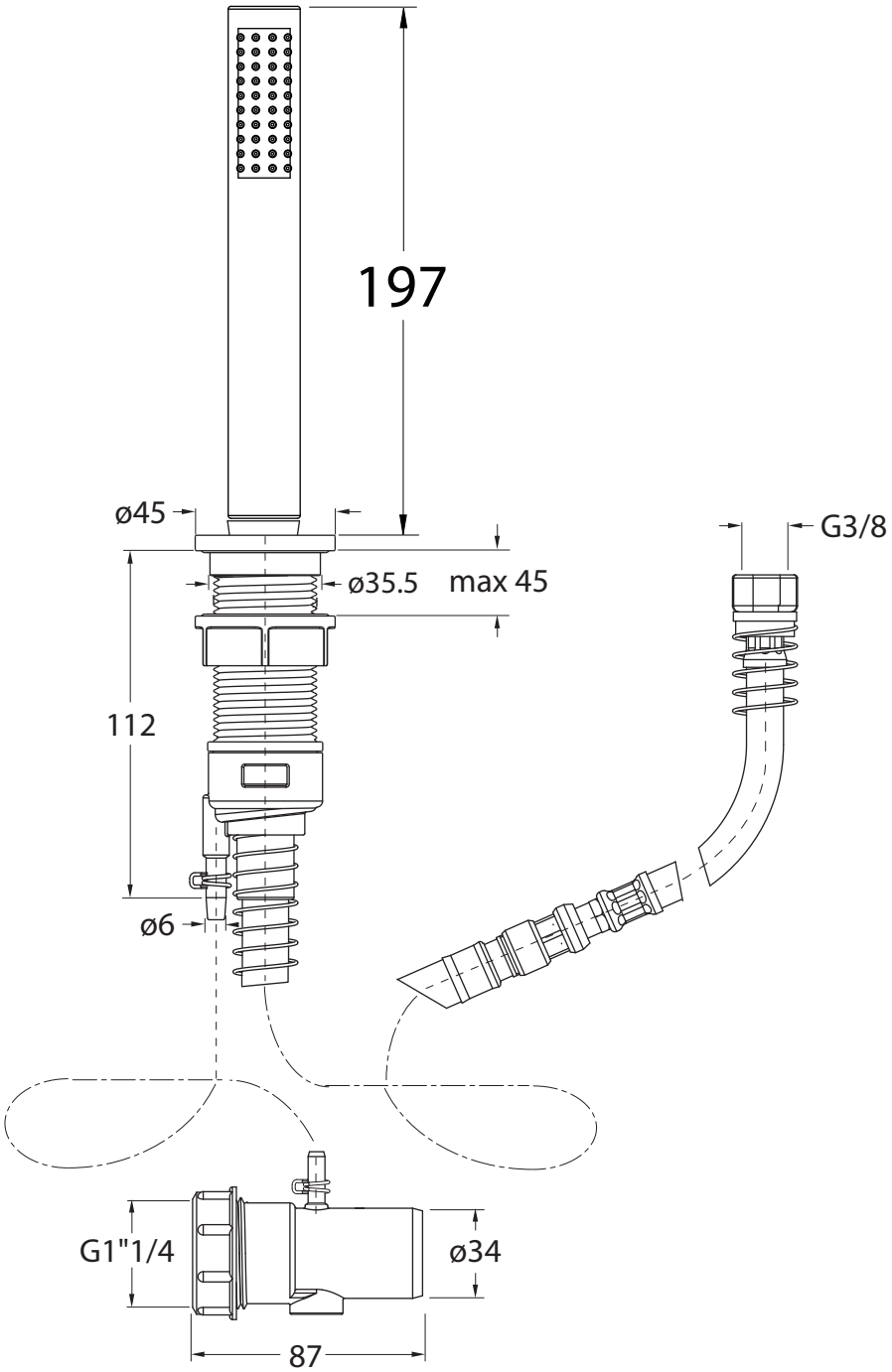

SK812C - HOSE, HANDSET & ESCUTCHEON SHOWER KIT